Matveyor® ½" Pitch Conveyor Chains for Product Dynamic Division in Packaging Machines

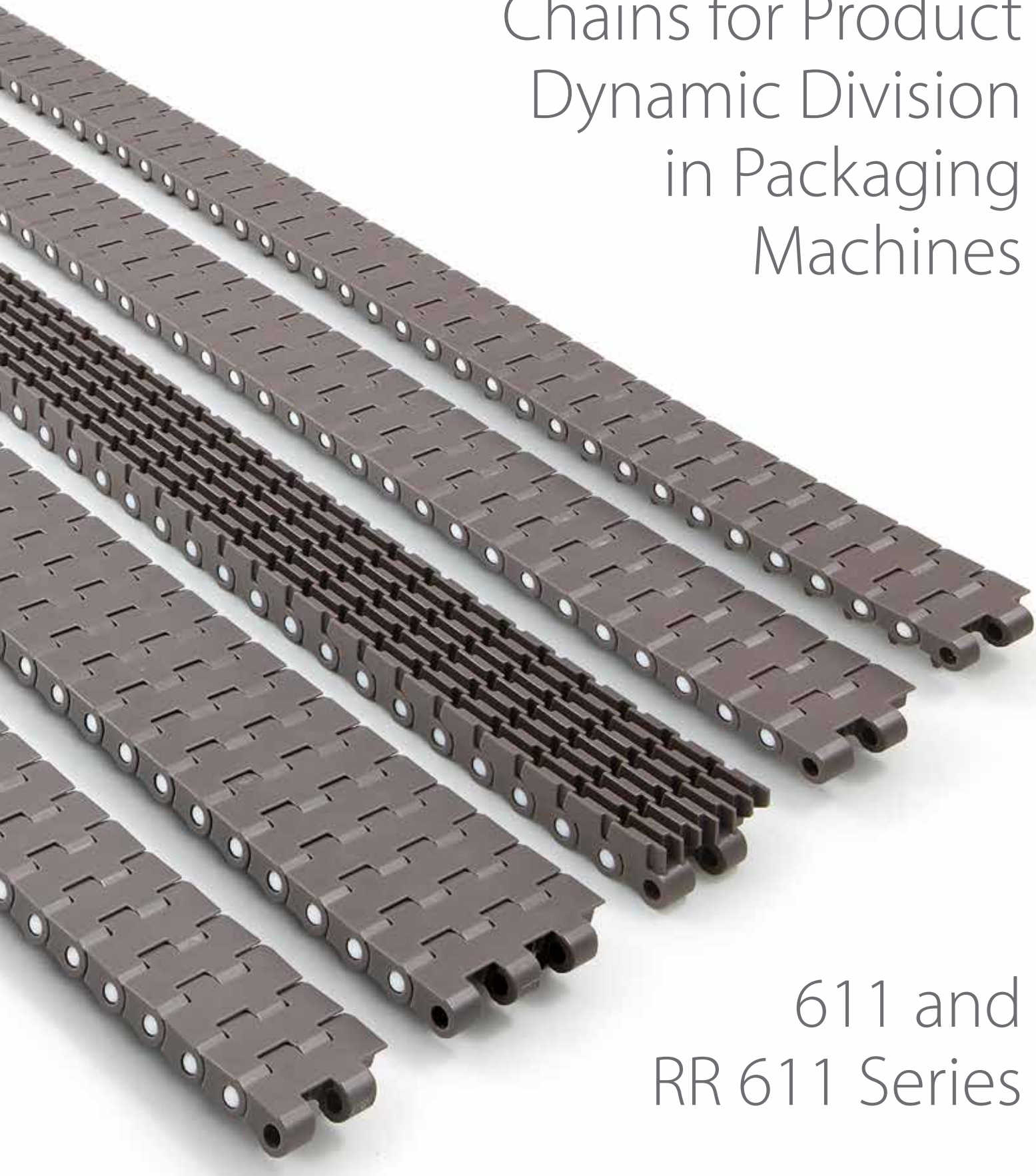

611 and RR 611 Series

REGINA CHAIN

PERFORMANCE IN MOTION

Matveyor® ½" Pitch Conveyor Chains for Product Dynamic Division in Packaging Machines - 611 & RR 611 Series

INDEX

Matveyor® ½" Pitch Conveyor Chains for Product Dynamic Division in Packaging Machines - 611 & RR 611 Series

ABSTRACT

Regina Matveyor® 611 and RR 611 Series are ideal for product dynamic division within packaging machines. These Series represent a unique solution for the packaging industry:

- Most complete range of ½" pitch narrow chains available on the market, with solid top surface (611 Series) or raised rib surface (RR 611 Series) and widths that range from 29 mm to 76 mm. This comprehensive range makes it possible to convey all type of containers.
- Clipless assembly of the modules, easing chain installation on the machines with no risk of pin disassembly during application.

Regina Matveyor® 611 and RR 611 Series, with or without tracking guide, have the following geometrical and technical characteristics:

- Pitch: 12,7 mm (½").
- Thickness: 8,7 mm (0.343").
- Available widths for 611 Series: 29 mm; 34 mm; 37 mm; 51 mm; 76 mm.
  For RR 611 Series: 29 mm; 37 mm; 46 mm; 55 mm; 76 mm.
- Tracking guide: chains widths available with or without tracking guide.
- Top surface: solid (611 Series) or raised rib (RR 611 Series).
- Bottom surface: round.
- Minimum backflexing radius: 20 mm for 611 Series, 35 mm for RR 611 Series.

Regina Matveyor® 611 and RR 611 Series are realized in the following materials:

- Chain material: UP Ultra Performance Homopolymer Delrin®.
- Pin material: Polyester (PBT).

UP material (Dupont™ Delrin® Ultra Performance Special Homopolymer Acetal Resin), thanks to its limited low wear over time and low coefficient of friction in non-lubricated environment, is ideal for conveyor applications.
Pins manufactured in PBT material display superior wear resistance and therefore are suitable for high speed applications with short center to center distance.

Matveyor® ½" Pitch Conveyor Chains for Product Dynamic Division in Packaging Machines - 611 & RR 611 Series

KEY FEATURES AND BENEFITS

RR 611 SERIES

611 SERIES

FEATURES

- Short pitch 12,7 mm (½").
- Curved bottom contour.
- Raised rib surface with special "Z" design (RR 611 Series).
- Availability of 8T sprocket.
- Clipless assembly of the modules.
- Reduced chain backflexing radius.

EFFECTS

- Chordal effect minimization, down to 0,15 mm with a ¾" diameter nose bar.
- Maximization of contact area with nose bar / roller.
- Top surface without discontinuity.
- Chain vibrations minimization.
- Easy chain installation on the machines.
- Overall return section dimensions minimization.

BENEFITS

- Tight end-to-end transfer.
- Maximization of product stability during travel and head transfer.
- Dead plate width minimization.
- Belt and nose bar wear minimization.
- Compact conveyor structure.
- Vertical room saving.
- Cost saving: maintenance & assembly time.

Matveyor® ½" Pitch Conveyor Chains for Product Dynamic Division in Packaging Machines - 611 & RR 611 Series

FIELDS OF APPLICATION

Regina Matveyor® 611 and RR 611 Series comprise conveyor chains dedicated to the product dynamic dividing area of packaging machines. In this area, individual containers (made of plastic, metal or glass) are conveyed to the pack formation area, where the containers are clustered in the required format by dividing bars, electronically synchronized with the conveyor chains.

INDUSTRIES OF APPLICATION:

- Bottling and Canning
- Food Filling
- Pharmaceutical
- Consumer goods

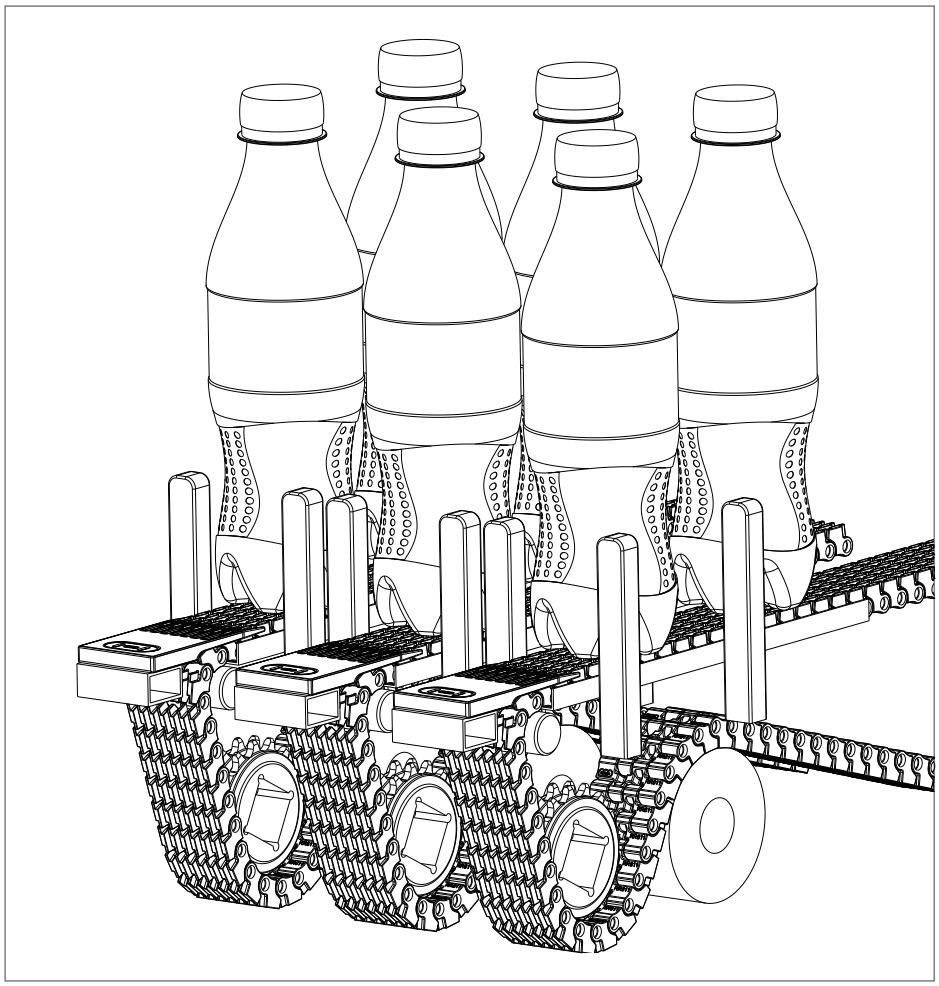

Matveyor® ½" Pitch Conveyor Chains for Product Dynamic Division in Packaging Machines - 611 & RR 611 Series

CHAIN SELECTION ACCORDING TO THE PRODUCT CONVEYED

Regina Matveyor® 611 and RR 611 Series display the most complete range of ½" pitch narrow chains available on the market, with widths that range from 29 mm to 76 mm, therefore making it possible to convey all type of containers.
Regina Matveyor® RR 611 Series offers the best support for the most unstable products like PET bottles with petaloid bottom.

The graph below serves as guideline to select the best chain according the the container conveyed.

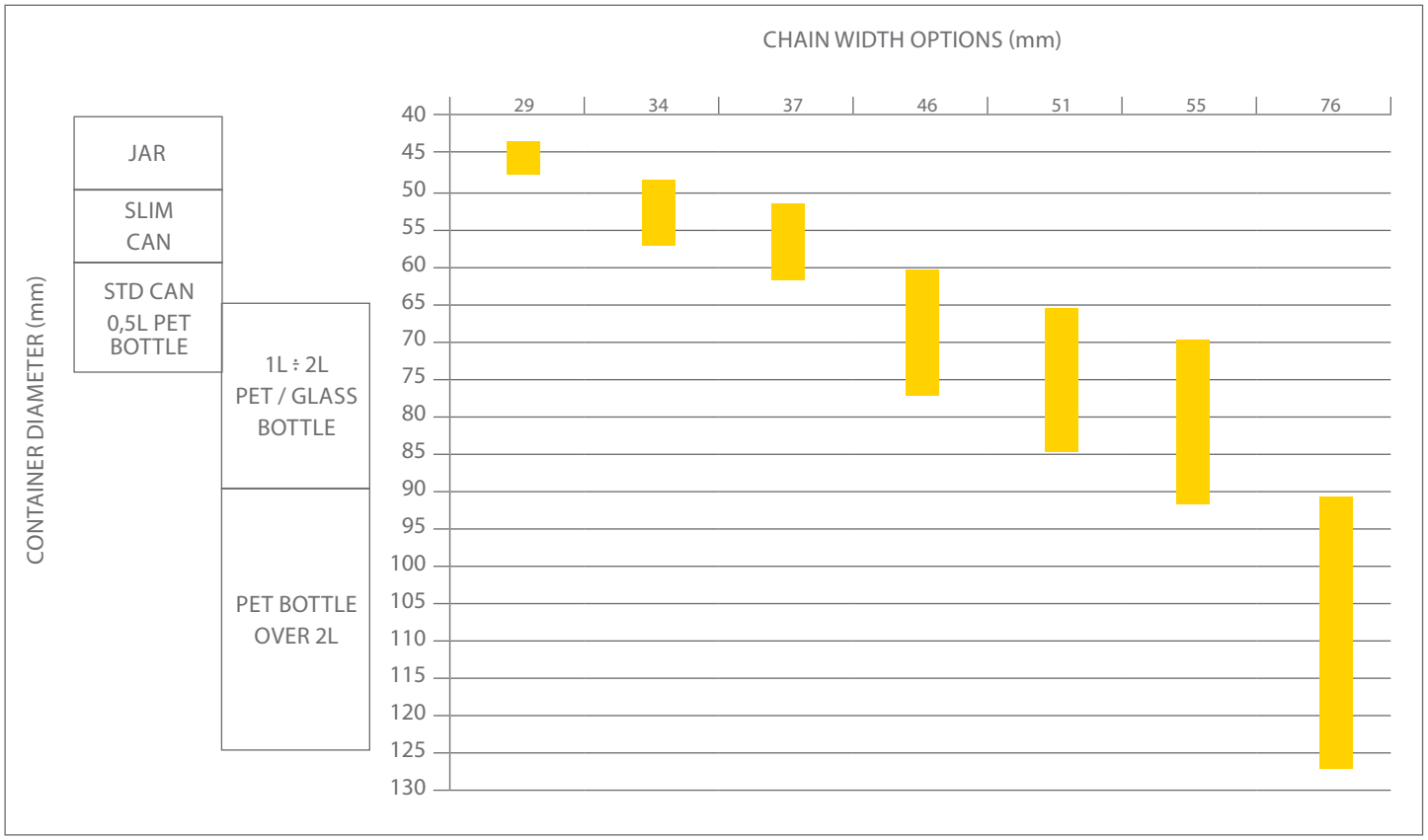

Matveyor® ½" Pitch Conveyor Chains for Product Dynamic Division in Packaging Machines - 611 & RR 611 Series

611 SERIES

8,7 mm (0.343") thickness
Solid Top

VERSION WITHOUT TRACKING GUIDE

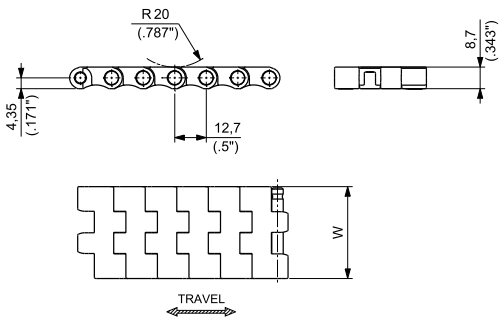

VERSION WITH TRACKING GUIDE

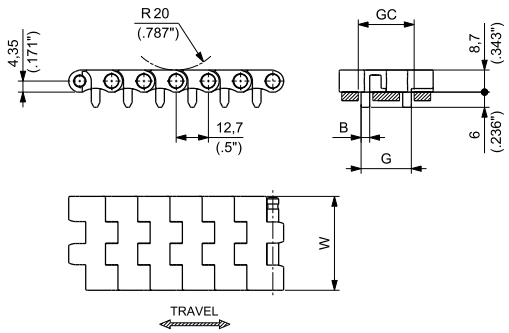

MATERIALS		VERSION	ITEM DESCRIPTION	PART NUMBER	WIDTH W		GUIDE TRACK GC		INTERNAL GUIDE G		TRACKING GUIDE THICKNESS B		WORKING LOAD (25C°/77F°)		WEIGHT	
Plate	Pin				mm	inch	mm	inch	mm	inch	mm	inch	N	lbs	kg/m	lbs/ft
ULTRA PERFORMANCE HOMOPOLYMER DELRIN® UP	PBT	WITHOUT TRACKING GUIDE	611A UP K 34	611AUPKAA/000	34	1.34	-	-	-	-	-	-	570	128	0,32	0.22
			611A UP K 37	611AUPKAD/000	37	1.46	-	-	-	-	-	-	570	128	0,35	0.24
			611A UP K 51	611AUPKB/000	51	2.01	-	-	-	-	-	-	570	128	0,49	0.33
			611A UP K 76	611AUPKDA/000	76	2.99	-	-	-	-	-	-	1067	240	0,75	0.50
ULTRA PERFORMANCE HOMOPOLYMER DELRIN® UP	PBT	WITH TRACKING GUIDE	611AG UP K 29	611AGUPKWB/000	29	1.14	21,8	0.858	19,8	0.780	3,40	0.134	570	128	0,29	0.19
			611AG UP K 34	611AGUPKAA/000	34	1.34	21,8	0.858	19,8	0.780	3,40	0.630	570	128	0,34	0.23
			611AG UP K 37	611AGUPKAD/000	37	1.46	21,8	0.858	19,8	0.780	3,40	0.630	570	128	0,37	0.25
			611AG UP K 51	611AGUPKB/000	51	2.01	37,8	1.488	35,8	1.409	5,00	0.926	570	128	0,52	0.35
			611AG UP K 76	611AGUPKDA/000	76	2.99	45,0	1.772	43,0	1.693	5,25	0.207	1067	240	0,77	0.52

Standard packaging
Rolls of 3.048 (10 ft)

Matveyor® ½" Pitch Conveyor Chains for Product Dynamic Division in Packaging Machines - 611 & RR 611 Series

RR 611 SERIES

8,7 mm (0.343") thickness
Raised Rib

VERSION WITHOUT TRACKING GUIDE

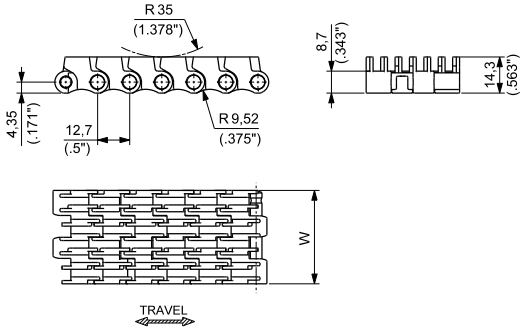

VERSION WITH TRACKING GUIDE

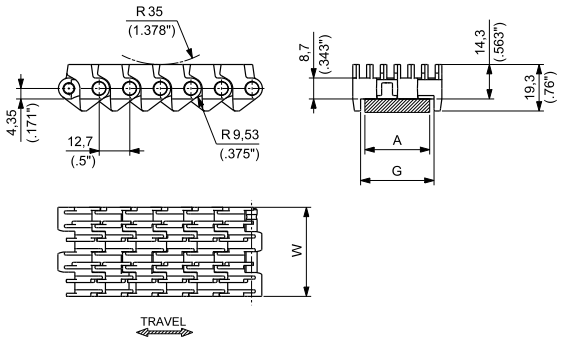

MATERIALS		VERSION	ITEM DESCRIPTION	PART NUMBER	WIDTH W		INTERNAL GUIDE G		GUIDE TRACK A		WORKING LOAD (25C°/77F°)		WEIGHT	
Plate	Pin				mm	inch	mm	inch	mm	inch	N	lbs	kg/m	lbs/ft
ULTRA PERFORMANCE HOMOPOLYMER DELRIN® UP	PBT	WITHOUT TRACKING GUIDE	RR611A UP K 29	RR611AUPKWB/000	29	1.14	-	-	-	-	570	128	0,37	0.25
			RR611A UP K 37	RR611AUPKAD/000	37	1.46	-	-	-	-	570	128	0,47	0.32
			RR611A UP K 46	RR611AUPKNA/000	46	1.81	-	-	-	-	570	128	0,57	0.38
			RR611A UP K 55	RR611AUPKCB/000	55	2.17					570	128	0,69	0.46
			RR611A UP K 76	RR611AUPKDA/000	76	2.99	-	-	-	-	1067	240	0,75	0.50
ULTRA PERFORMANCE HOMOPOLYMER DELRIN® UP	PBT	WITH TRACKING GUIDE	RR611AG UP K 37	RR611AGUPKAD/000	37	1.46	30,5	1.20	30	1.18	570	128	0,50	0.34

Standard packaging
Rolls of 3.048 (10 ft)

Matveyor® ½" Pitch Conveyor Chains for Product Dynamic Division in Packaging Machines - 611 & RR 611 Series

ACCESSORIES

COMBS FOR CHAINS

FULL PRODUCT RANGE OVERVIEW

Combs for:

- RR 611

MATERIALS	
Combs	UP Ultra Performance Homopolymer Delrin®

COMB FOR K 29 CHAIN

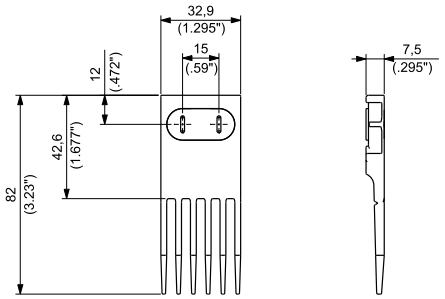

PART NUMBER **TC611-01**

COMB FOR K 37 CHAIN

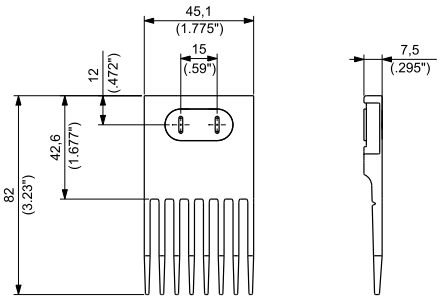

PART NUMBER **TC611-03**

COMB FOR K 46 CHAIN

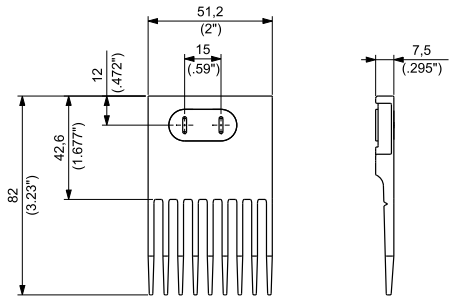

PART NUMBER **TC611-04**

COMB FOR K 55 CHAIN

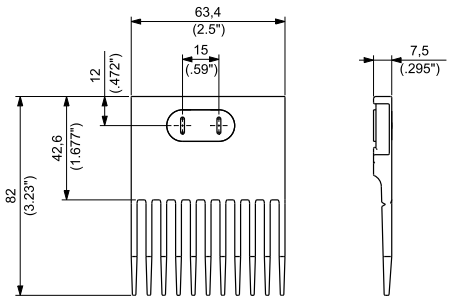

PART NUMBER **TC611-06**

COMB FOR K 76 CHAIN

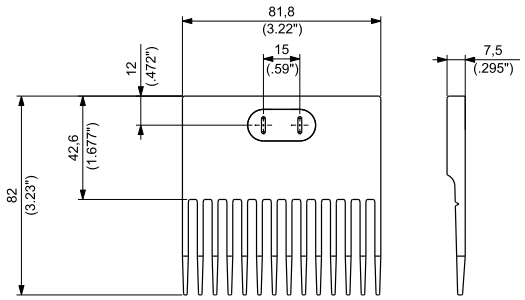

PART NUMBER **TC611-07**

ACCESSORIES

SPROCKETS FOR CHAINS - OVERVIEW

ABSTRACT
Regina sprockets for Matveyor® RR 611 Series are available for all chain widths, whether or not the chain has tracking guide.

Regina sprockets for Matveyor® 611 Series are diversely available depending on whether the chain has tracking guide or not. In particular:

NUMBER OF TEETH	TYPE OF SPROCKETS	MANUFACTURING	CHAIN TYPE COMBINATION		MATERIALS	
			CHAINS WITHOUT TRACKING GUIDE	CHAINS WITH TRACKING GUIDE	Sprocket	Screw & nuts
8T	Drive / Idler	Machined + solid	All widths	51mm; 76mm	Polyamide	-
14T	Drive / Idler	Machined + solid	All widths	51mm; 76mm	Polyamide	-
16T	Drive / Idler	Moulded + solid	All widths	All widths (two different sprockets)	Reinforced Polyamide	-
19T	Drive / Idler	Machined + solid	All widths	51mm; 76mm	Polyamide	-
24T	Drive / Idler	Machined + solid	All widths	29mm; 34mm; 37mm	Polyamide	-
28T	Drive / Idler	Moulded + solid	All widths	51mm; 76mm	Reinforced Polyamide	-
28T	Drive / Idler	Moulded + split	All widths	All widths (two different sprockets)	Reinforced Polyamide	Screws in stainless steel Nuts in zinc plated steel
32T	Drive / Idler	Machined + split	All widths	51mm; 76mm	Polyamide	Screws in stainless steel Nuts in brass
36T	Drive / Idler	Moulded + split	All widths	51mm; 76mm	Reinforced Polyamide	Screws in stainless steel Nuts in zinc plated steel
38T	Drive / Idler	Moulded + split	All widths	51mm; 76mm	Reinforced Polyamide	Screws in stainless steel Nuts in zinc plated steel

The FULL PRODUCT RANGE OVERVIEW of Regina sprockets for Matveyor® 611 and RR 611 Series is displayed in the forthcoming pages, according to the following logic:

- Pages 11 and 12: sprockets for 611 Series, chains width of 29 mm, 34 mm, 37 mm **with** tracking guide
- Pages 13, 14, 15, and 16:

  - sprockets for 611 Series, all chains width **without** tracking guide
  - sprockets for 611 Series, chains width of 51 mm and 76 mm **with** tracking guide
  - sprockets for RR 611 Series, all chains widths

Matveyor® ½" Pitch Conveyor Chains for Product Dynamic Division in Packaging Machines - 611 & RR 611 Series

ACCESSORIES

SPROCKETS FOR CHAINS
FULL PRODUCT RANGE OVERVIEW

16T SPROCKET

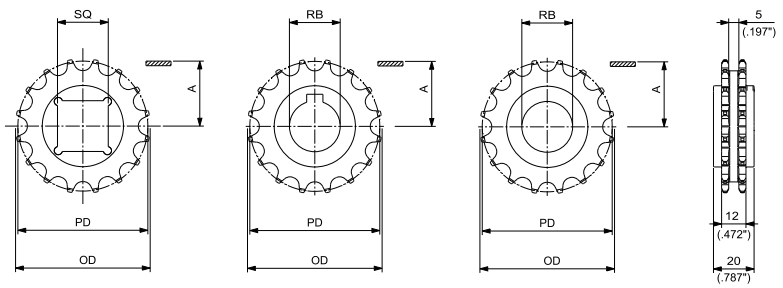

Moulded sprockets for:
- 611 Series with tracking guide (29 mm, 34 mm, 37 mm widths only)

28T SPROCKET

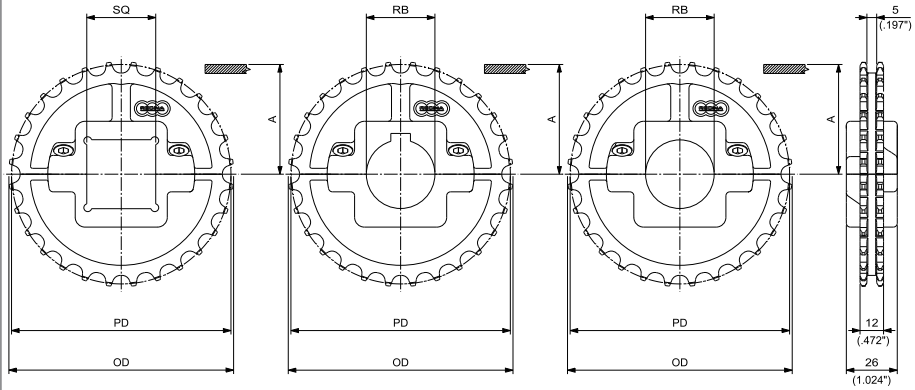

MATERIALS	
Sprocket	PGF Reinforced Polyamide
Screws*	SS Stainless Steel
Nuts*	ZN Zinc Plated Steel

* For split sprockets only.

MOULDED SOLID DRIVE AND IDLER SPROCKETS

N. TEETH	PITCH DIAMETER OD		OUTSIDE DIAMETER OD		WEAR STRIPS POSITIONING A		BORE SIZE*		PART NUMBER			WEIGHT	
									SQUARE BORE SQ	ROUND BORE RB			
	mm	inch	mm	inch	mm	inch	mm	inch	DRIVE/IDLER	DRIVE	IDLER	kg	lb
16	65,10	2.563	66,30	2.610	28,20	1.110	20			MPBT6111620	MPBF6111620	0,05	0.11
							25		MPBQ6111625	MPBT6111625	MPBF6111625	0,04	0.09
							30			MPBT6111630	MPBF6111630	0,04	0.09
								1		MPBT61116254	MPBF61116254	0,04	0.09
								1 ¼		MPBT61116317	MPBF61116317	0,03	0.07

MOULDED SPLIT DRIVE AND IDLER SPROCKETS

N. TEETH	PITCH DIAMETER OD		OUTSIDE DIAMETER OD		WEAR STRIPS POSITIONING A		BORE SIZE*		PART NUMBER			WEIGHT	
									SQUARE BORE SQ	ROUND BORE RB			
	mm	inch	mm	inch	mm	inch	mm	inch**	DRIVE/IDLER	DRIVE	IDLER	kg	lb
28	113,43	4.466	114,70	4.516	52,40	2.063	25			MPBST6112825	MPBSF6112825	0,15	0.33
							30			MPBST6112830	MPBSF6112830	0,15	0.33
							35			MPBST6112835	MPBSF6112835	0,14	0.31
							40		MPBSQ6112840	MPBST6112840	MPBSF6112840	0,13	0.29
								1		MPBST61128254	MPBSF61128254	0,15	0.33
								1 ¼		MPBST61128317	MPBSF61128317	0,14	0.31
								1 ½	MPBSQ61128381	MPBST61128381	MPBSF61128381	0,14	0.31

*In case of round bore diameter is indicated. In case of square bore, side of the square is indicated.
** Imperial round bore drive sprockets are supplied with setcrew. Metric round bore drive sprockets are supplied without setscrew.

Matveyor® ½" Pitch Conveyor Chains for Product Dynamic Division in Packaging Machines - 611 & RR 611 Series

ACCESSORIES

SPROCKETS FOR CHAINS
FULL PRODUCT RANGE OVERVIEW

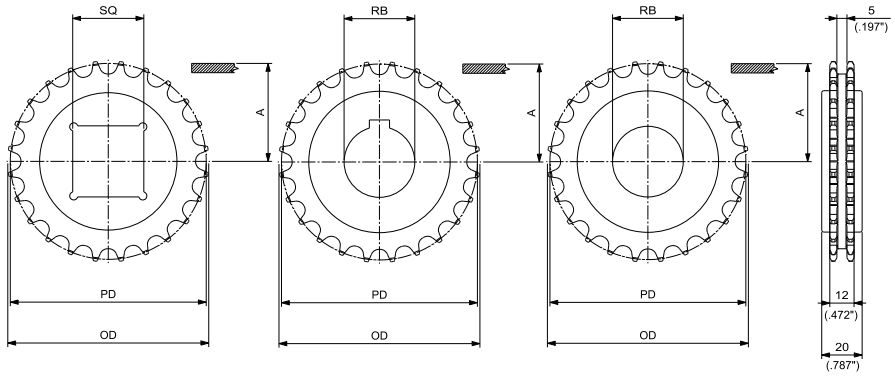

Machined solid sprockets for:
- 611 Series with tracking guide (29 mm, 34 mm, 37 mm widths only)

MATERIALS	
Sprocket	PA Polyamide

MACHINED SOLID DRIVE AND IDLER SPROCKETS

N. TEETH	PITCH DIAMETER OD		OUTSIDE DIAMETER OD		WEAR STRIPS POSITIONING A		BORE SIZE*		PART NUMBER			WEIGHT	
									SQUARE BORE SQ	ROUND BORE RB			
	mm	inch	mm	inch	mm	inch	mm	inch**	DRIVE/IDLER	DRIVE	IDLER	kg	lb
24	97,30	3.831	99,50	3.917	44,30	1.744	25			MPBAT6112425	MPBAF6112420	0,10	0.22
							30			MPBAT6112430	MPBAF6112430	0,09	0.20
							35			MPBAT6112435	MPBAF6112435	0,09	0.20
							40		MPBAQ6112440	MPBAT6112440	MPBAF6112440	0,08	0.18
								1		MPBAT61124254	MPBAF61124254	0,10	0.22
								1 ¼		MPBAT61124317	MPBAF61124317	0,10	0.22
								1 ½	MPBAQ61124381	MPBAT61124381	MPBAF61124381	0,09	0.20

*In case of round bore diameter is indicated. In case of square bore, side of the square is indicated.
** Imperial round bore drive sprockets are supplied with setcrew. Metric round bore drive sprockets are supplied without setscrew.

Matveyor® ½" Pitch Conveyor Chains for Product Dynamic Division in Packaging Machines - 611 & RR 611 Series

ACCESSORIES

SPROCKETS FOR CHAINS
FULL PRODUCT RANGE OVERVIEW

16T SPROCKET

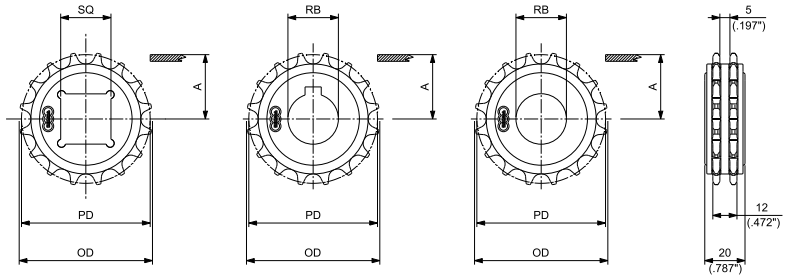

Moulded solid sprockets for:
- 611 Series without tracking guide (all widths)
- 611 Series with tracking guide (51 mm, 76 mm widths only)
- RR 611 Series (all widths)

28T SPROCKET

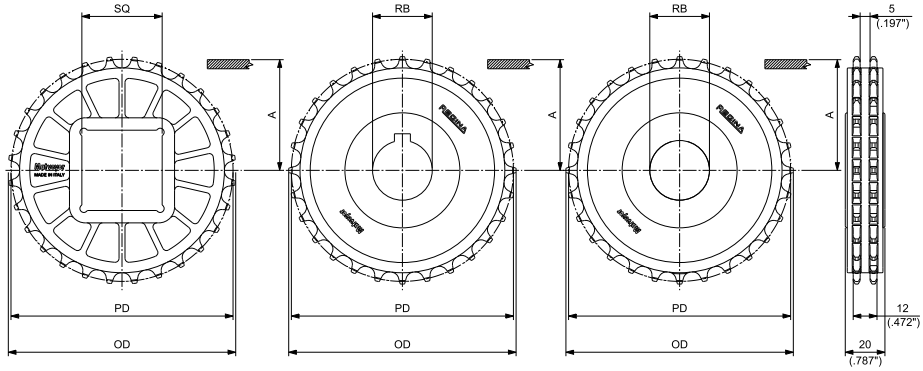

MATERIALS	
Sprocket	PGF Reinforced Polyamide

MOULDED SOLID DRIVE AND IDLER SPROCKETS

N. TEETH	PITCH DIAMETER PD		OUTSIDE DIAMETER PD		WEAR STRIPS POSITIONING A		BORE SIZE*		PART NUMBER			WEIGHT	
									SQUARE BORE SQ	ROUND BORE RB			
	mm	inch	mm	inch	mm	inch	mm	inch	DRIVE/IDLER	DRIVE	IDLER	kg	lb
16	65,10	2.563	66,30	2.610	28,20	1.110	20			MPBT6001620	MPBF6001620	0,06	0.13
							25		MPBQ6001625	MPBT6001625	MPBF6001625	0,05	0.11
							30			MPBT6001630	MPBF6001630	0,05	0.11
								1		MPBT60016254	MPBF60016254	0,05	0.11
								1 ¼		MPBT60016317	MPBF60016317	0,04	0.09
28	113,43	4.466	114,70	4.516	52,40	2.063	25			MPBT6002825	MPBF6002825	0,15	0.33
							30			MPBT6002830	MPBF6002830	0,14	0.32
							35			MPBT6002835	MPBF6002835	0,13	0.29
							40		MPBQ6002840	MPBT6002840	MPBF6002840	0,12	0.26
							60		MPBQ6002860			0,10	0.21
								1		MPBT60028254	MPBF60028254	0,15	0.33
								1 ¼		MPBT60028317	MPBF60028317	0,14	0.31
								1 ½	MPBQ60028381	MPBT60028381	MPBF60028381	0,13	0.29

*In case of round bore diameter is indicated. For square bore, side of the square is indicated

Matveyor® ½" Pitch Conveyor Chains for Product Dynamic Division in Packaging Machines - 611 & RR 611 Series

ACCESSORIES

SPROCKETS FOR CHAINS
FULL PRODUCT RANGE OVERVIEW

8T SPROCKET

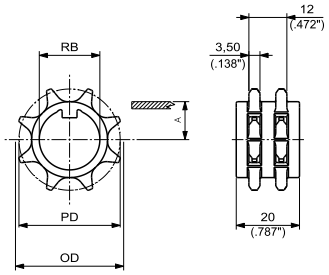

Machined solid sprockets for:
- 611 Series without tracking guide (all widths)
- 611 Series with tracking guide (51 mm, 76 mm widths only)
- RR 611 Series (all widths)

14T-19T SPROCKETS

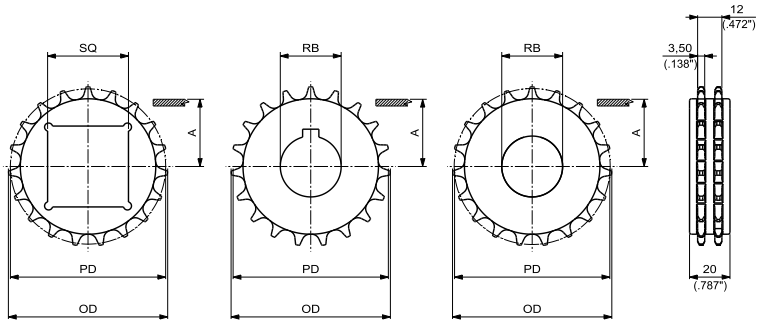

MATERIALS	
Sprocket	PA Polyamide

MACHINED SOLID DRIVE AND IDLER SPROCKETS

N. TEETH	PITCH DIAMETER PD		OUTSIDE DIAMETER OD		WEAR STRIPS POSITIONING A		BORE SIZE*		PART NUMBER			WEIGHT	
									SQUARE BORE SQ	ROUND BORE RB			
	mm	inch	mm	inch	mm	inch	mm	inch**	DRIVE/IDLER	DRIVE	IDLER	kg	lb
8	33,19	1.307	34,20	1.346	12,25	0.482	20			MPBAT6000820	MPBAF6000820	0,01	0.01
								¾		MPBAT60008190	MPBAF60008190	0,01	0.01
14	57,07	2.247	59,00	2.323	24,18	0.952	25		MPBAQ6001425	MPBAT6001425	MPBAF6001425	0,03	0.07
								1		MPBAT60014254	MPBAF60014254	0,03	0.07
19	77,16	3.038	78,80	3.102	34,20	1.346	25			MPBAT6001925	MPBAF6001925	0,07	0.16
							30			MPBAT6001930	MPBAF6001930	0,07	0.15
							35			MPBAT6001935	MPBAF6001935	0,06	0.13
							40		MPBAQ6001940	MPBAT6001940	MPBAF6001940	0,05	0.12
								1		MPBAT60019254	MPBAF60019254	0,07	0.16
								1 ¼		MPBAT60019317	MPBAF60019317	0,07	0.14
								1 ½	MPBAQ60019381	MPBAT60019381	MPBAF60019381	0,06	0.12

*In case of round bore diameter is indicated. In case of square bore, side of the square is indicated.
** Imperial round bore drive sprockets are supplied with setcrew. Metric round bore drive sprockets are supplied without setscrew.

Matveyor® ½" Pitch Conveyor Chains for Product Dynamic Division in Packaging Machines - 611 & RR 611 Series

ACCESSORIES

SPROCKETS FOR CHAINS
FULL PRODUCT RANGE OVERVIEW

Moulded split sprockets for:

- 611 Series without tracking guide (all widths)
- 611 Series with tracking guide (51 mm, 76 mm widths only)
- RR 611 Series (all widths)

MATERIALS	
Sprocket	PGF Reinforced Polyamide
Screws	SS Stainless steel
Nuts	ZN Zinc Plated Steel

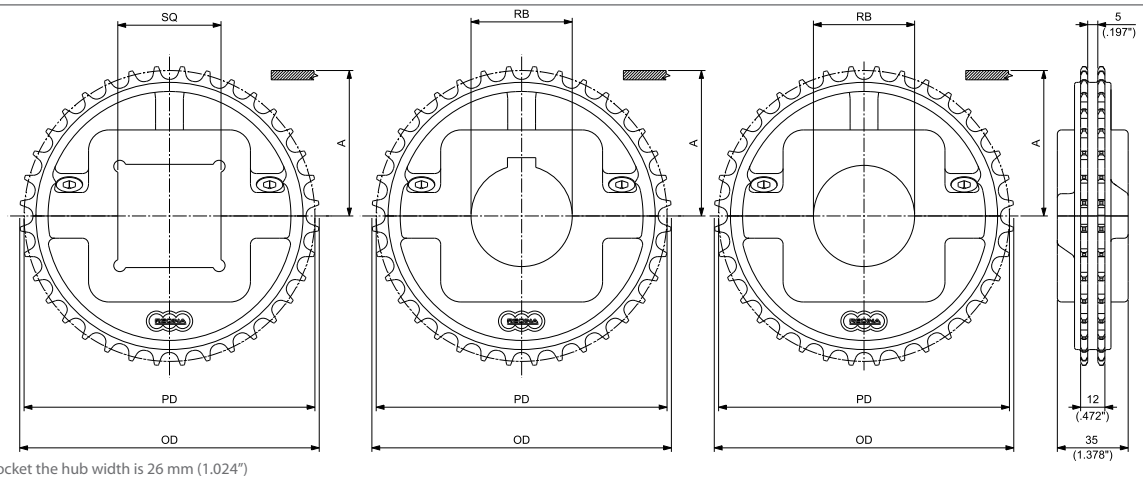

NOTE: for 28T sprocket the hub width is 26 mm (1.024")

MOULDED SPLIT DRIVE AND IDLER SPROCKETS

N. TEETH	PITCH DIAMETER PD		OUTSIDE DIAMETER OD		WEAR STRIPS POSITIONING A		BORE SIZE*		PART NUMBER			WEIGHT	
									SQUARE BORE SQ	ROUND BORE RB			
	mm	inch	mm	inch	mm	inch	mm	inch**	DRIVE/IDLER	DRIVE	IDLER	kg	lb
28	113,43	4.466	114,69	4.515	61,10	2.406	25			MPBST6002825	MPBSF6002825	0,16	0.35
							30			MPBST6002830	MPBSF6002830	0,16	0.34
							35			MPBST6002835	MPBSF6002835	0,15	0.33
							40		MPBSQ6002840	MPBST6002840	MPBSF6002840	0,14	0.32
								1		MPBST60028254	MPBSF60028254	0,16	0.35
								1 ¼		MPBST60028317	MPBSF60028317	0,15	0.34
								1 ½	MPBSQ60028381	MPBST60028381	MPBSF60028381	0,15	0.32
36	145,70	5.736	148,00	5.827	77,20	3.039	30			MPBST6003630	MPBSF6003630	0,38	0.84
							35			MPBST6003635	MPBSF6003635	0,37	0.82
							40		MPBSQ6003640	MPBST6003640	MPBSF6003640	0,36	0.79
							45			MPBST6003645	MPBSF6003645	0,35	0.77
							50		MPBSQ6003650	MPBST6003650	MPBSF6003650	0,34	0.75
								1		MPBST60036254	MPBSF60036254	0,38	0.84
								1 3/16		MPBST60036301	MPBSF60036301	0,38	0.84
								1 ¼		MPBST60036317	MPBSF60036317	0,38	0.84
								1 7/16		MPBST60036365	MPBSF60036365	0,37	0.82
								1 ½	MPBSQ60036381	MPBST60036381	MPBSF60036381	0,37	0.82
38	153,80	6.055	156,00	6.142	81,20	3.197	30			MPBST6003830	MPBSF6003830	0,39	0.86
							35			MPBST6003835	MPBSF6003835	0,38	0.84
							40		MPBSQ6003840	MPBST6003840	MPBSF6003840	0,37	0.82
							45			MPBST6003845	MPBSF6003845	0,36	0.79
							50		MPBSQ6003850	MPBST6003850	MPBSF6003850	0,35	0.77
								1		MPBST60038254	MPBSF60038254	0,40	0.88
								1 3/16		MPBST60038301	MPBSF60038301	0,39	0.86
								1 ¼		MPBST60038317	MPBSF60038317	0,39	0.86
								1 7/16		MPBST60038365	MPBSF60038365	0,38	0.84
								1 ½	MPBSQ60038381	MPBST60038381	MPBSF60038381	0,38	0.84

*In case of round bore diameter is indicated. In case of square bore, side of the square is indicated.
** Imperial round bore drive sprockets are supplied with setcrew. Metric round bore drive sprockets are supplied without setscrew.

Matveyor® ½" Pitch Conveyor Chains for Product Dynamic Division in Packaging Machines - 611 & RR 611 Series

ACCESSORIES

SPROCKETS FOR CHAINS
FULL PRODUCT RANGE OVERVIEW

Machined split sprockets for:
- 611 Series without tracking guides (all widths)
- 611 Series with tracking guide (51 mm, 76 mm widths only)
- RR 611 Series (all widths)

MATERIALS	
Sprocket	PA Polyamide
Screws	SS Stainless Steel
Nuts	B Brass

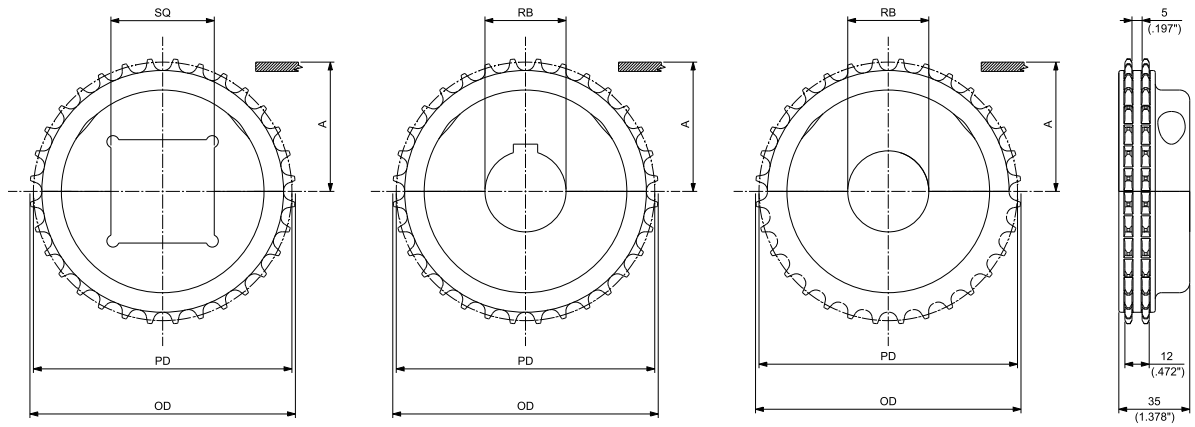

MACHINED SPLIT DRIVE AND IDLER SPROCKETS

N. TEETH	PITCH DIAMETER PD		OUTSIDE DIAMETER OD		WEAR STRIPS POSITIONING A		BORE SIZE*		PART NUMBER			WEIGHT	
									SQUARE BORE SQ	ROUND BORE RB			
	mm	inch	mm	inch	mm	inch	mm	inch**	DRIVE/IDLER	DRIVE	IDLER	kg	lb
32	129,57	5.101	131,00	5.157	69,10	2.720	25			MPBAST6003225	MPBASF6003225	0,41	0.89
							30			MPBAST6003230	MPBASF6003230	0,40	0.88
							35			MPBAST6003235	MPBASF6003235	0,39	0.85
							40		MPBASQ6003240	MPBAST6003240	MPBASF6003240	0,38	0.84
							45			MPBAST6003245	MPBASF6003245	0,36	0.80
							50		MPBASQ6003250	MPBAST6003250	MPBASF6003250	0,35	0.76
								1		MPBAST60032254	MPBASF60032254	0,41	0.89
								1 3/16		MPBAST60032301	MPBASF60032301	0,40	0.88
								1 ¼		MPBAST60032317	MPBASF60032317	0,39	0.87
								1 7/16		MPBAST60032365	MPBASF60032365	0,38	0.84
								1 ½	MPBASQ60032381	MPBAST60032381	MPBASF60032381	0,38	0.84

*In case of round bore diameter is indicated. In case of square bore, side of the square is indicated.
** Imperial round bore drive sprockets are supplied with setcrew. Metric round bore drive sprockets are supplied without setscrew.

ENGINEERING MANUAL

DRIVE CONFIGURATION

The drawings shown in Exhibit 1 and 2 and the recommandations below suggest a proprer drive set-up to guarantee:

- a compact conveyor structure in the return section AND
- maximum product stability during head transfer

EXHIBIT 1 - 611 SERIES SET-UP

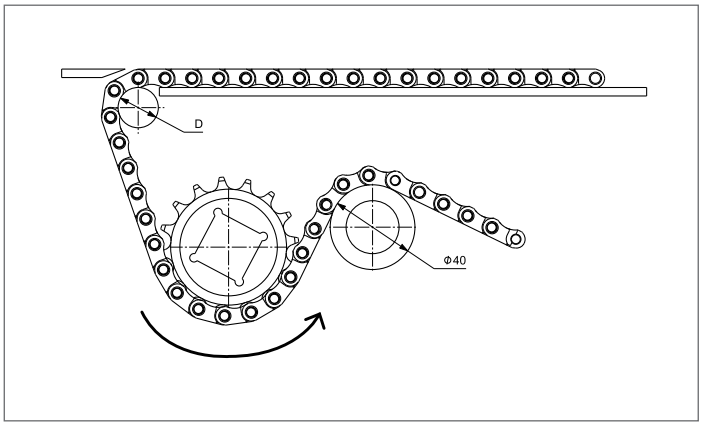

EXHIBIT 2 - RR 611 SERIES SET-UP

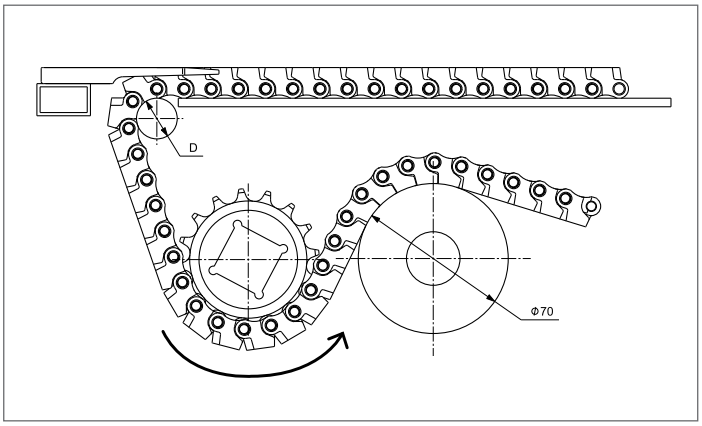

- Chain and nose bar wear may cause product instability, therefore it is recommended to use dynamic head rollers with a minimum diameter D of:

Series	D - MINIMUM HEAD ROLLER DIAMETER			
	CHAINS WITHOUT TRACKING GUIDE		CHAINS WITH TRACKING GUIDE	
	mm	inch	mm	inch
611, RR 611	19	0.75	25	1

When using chains with tracking guide (611 or RR 611 Series) , the head rollers needs to be properly machined down to avoid interference with the guide.

- A back bending roller minimum diameter of:
  - 40 mm (1.57") for 611 Series
  - 70 mm (2.76") for RR 611 Series

  is necessary to minimize back-flexing. This results in a decrease of joints wear and in an increase of chain life.

- The compact conveyor structure in the return section does not allow for a proper catenary sag. Use the back bending roller as tensioner with the possibility to move in slots present in the conveyor frame to adjust the tension on the chain.

- Recommended drive wrap angle is 140° - 150°, to guarantee correct sprocket engagement.

ENGINEERING MANUAL

COMBS POSITIONING FOR RR 611 SERIES

HEAD ROLLERS CONFIGURATION

Exhibit 3 and 4 display the correct positioning of combs using dynamic head rollers configuration.

EXHIBIT 3 - RR 611 SERIES WITHOUT TRACKING GUIDE

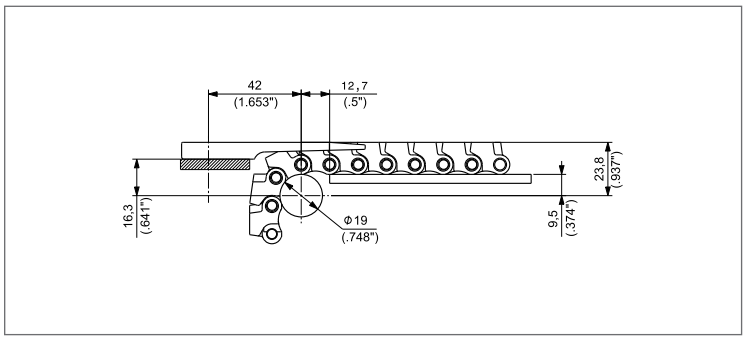

EXHIBIT 4 - RR 611 SERIES WITH TRACKING GUIDE

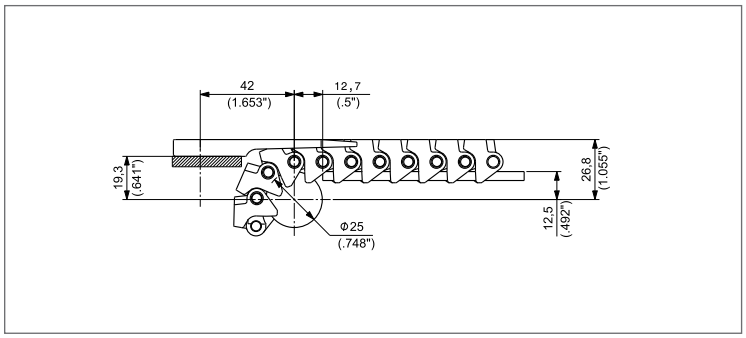

8T SPROCKET CONFIGURATION

Exhibit 5 displays the correct positioning of combs using 8T sprockets installed on conveyor ends.

EXHIBIT 5

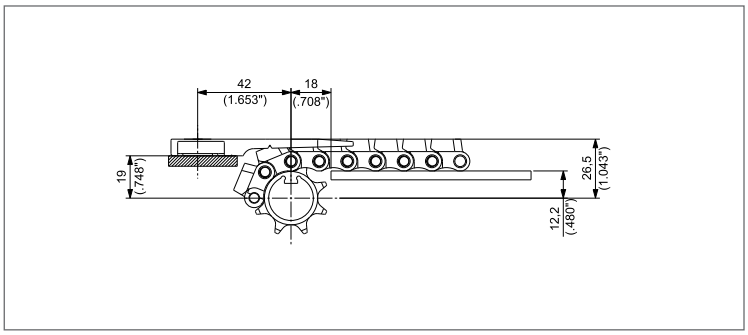

ENGINEERING MANUAL

ASSEMBLY

Step 1 - Bring one chain section close to the other with the proper hinges orientation.

Step 2 - Hammer the pin inside the hinges using a drift punch to link the two parts.

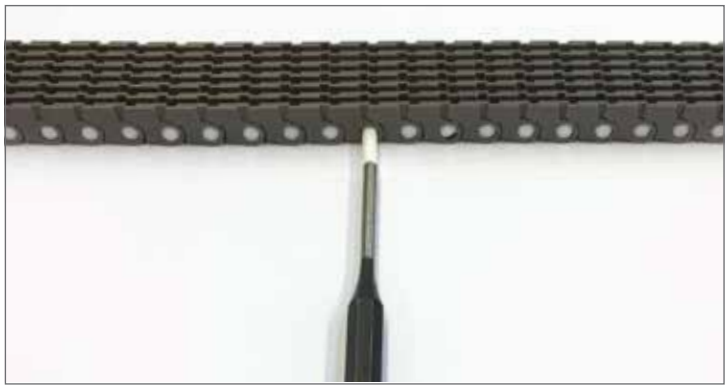

DISASSEMBLY

Step 1 - Identify the correct side for disassembly by the pin end with the smallest diameter as shown in the picture.

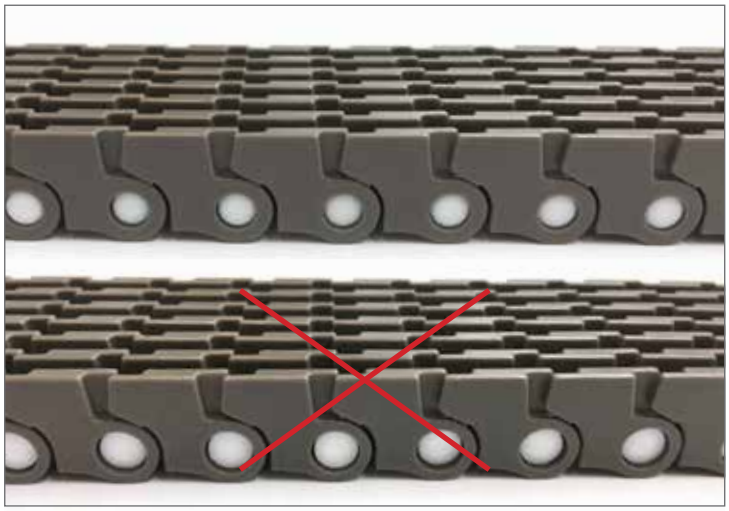

Step 2 - Hammer the pin out of the chain using a drift punch to separate the two parts of the chain.

NOTE: ALL THE STEPS ABOVE ARE VALID BOTH FOR 611 AND RR 611 SERIES.

PERFORMANCE IN MOTION

ITALY

REGINA CATENE CALIBRATE S.p.A.
HEAD OFFICE:
Via Monza, 90
23870 Cernusco Lombardone (LC) - Italy
Tel. +39 039 99801
Fax +39 039 9905229
sales@reginachain.net

USA

REGINA USA, INC.
305 E. Mahn Court
Oak Creek, WI 53154 - USA
Tel. 001 414 5710032
Fax 001 414 5710225
sales.us@reginachain.net

FRANCE

REGINA INDUSTRIE s.a.r.l.
Z.A.C. des Chatelliers
34 Rue des Frères Lumière
45800 Saint Jean De Braye - France
Tel. +33 238 836363
Fax +33 238 836413
sales.fr@reginachain.net

MEXICO

REGINA de MEXICO S.A. de C.V.
Av. Aviación 5051-28
Col. San Juan de Ocotan
45019 Zapopan, Jalisco – Mexico
Tel. +52 33 3627 4043
Fax +52 33 3627 3930
sales.mx@reginachain.net

CHINA

REGINA TIANJIN CHAIN & BELT CO., LTD.
Xi Qing Economic Development Area,
Xiang Rui Road n. 17
Tian Xiang Industrial Zone
300385 Tian Jin - China
Tel. +86 22 83961223
Fax +86 22 83961202
sales.cn@reginachain.net

UNITED KINGDOM

REGINA INTERNATIONAL LIMITED
Unit 1, Dyneley Road,
Greenbank Business Park
Whitebirk, Blackburn,
Lancs BB1 3AB - United Kingdom
Tel. +44 1254 661116
Fax +44 1254 59456
sales.uk@reginachain.net

ARGENTINA

REGINA INTERNATIONAL S.A.
Diagonal 190,
1788-1655 Josè Leon Suarez
Prov. Buenos Aires – Argentina
Tel. +54 11 47296667
Fax +54 11 47203210
sales.ar@reginachain.net

GERMANY

SALES OFFICE
Tel. +49 1705251348
Fax +49 7181489535
sales.de@reginachain.net

THE NETHERLANDS

SALES OFFICE
Tel. +31 610681114
sales.nl@reginachain.net

SPAIN

CADENAS REGINA ESPAÑA, S.L.
Calle Industria, 37
08120 La Llagosta - Barcelona - España
Tel. +34 93 5742838
Fax +34 93 5740735
sales.es@reginachain.net

INDIA

SALES OFFICE
Tel. +91 9881399026
sales.in@reginachain.net

www.reginachain.net